SKOPJE OF THE NEW GENERATION

СКОПЈЕ НА НОВАТА ГЕНЕРАЦИЈА

EUROPE HOUSE

Location: Ezerce

Identification Code: MGMVS

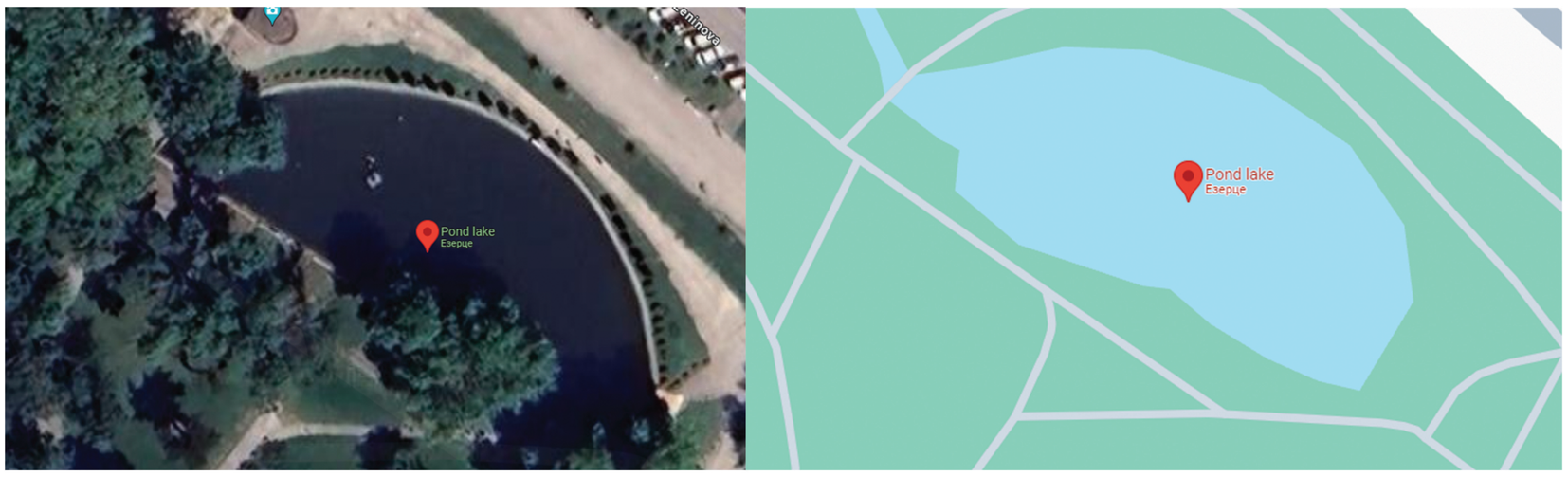

Location with site plan

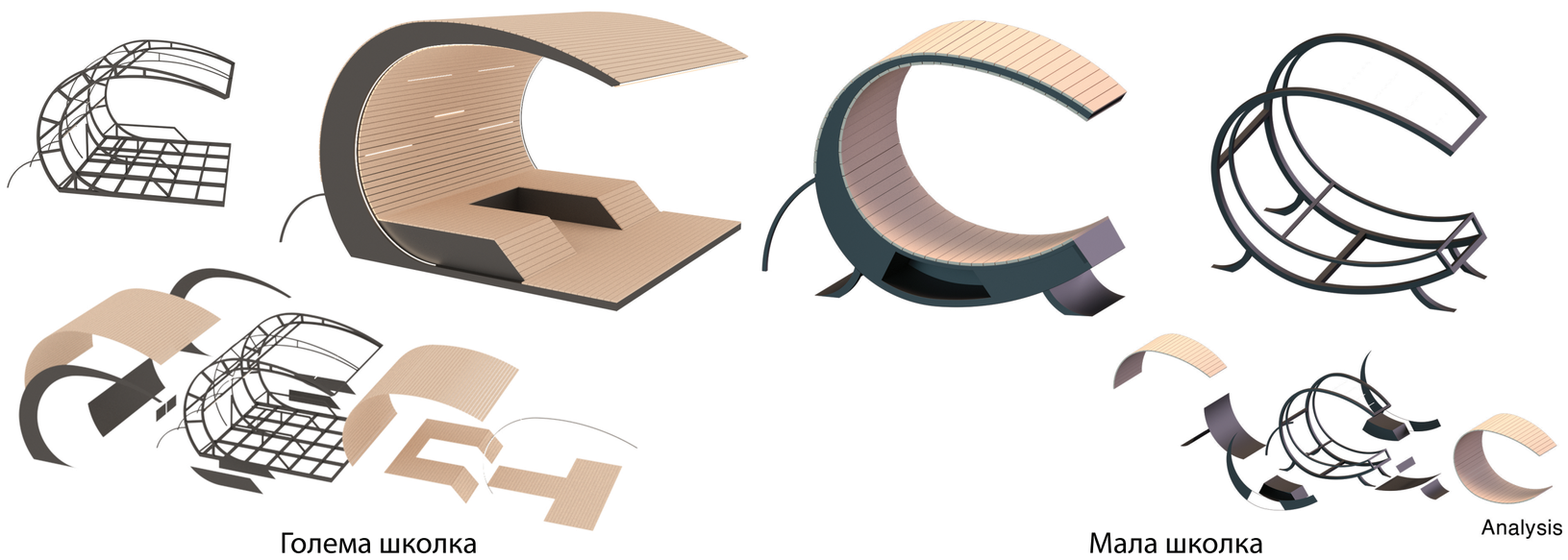

Голема школка

Мала школка

Analysis

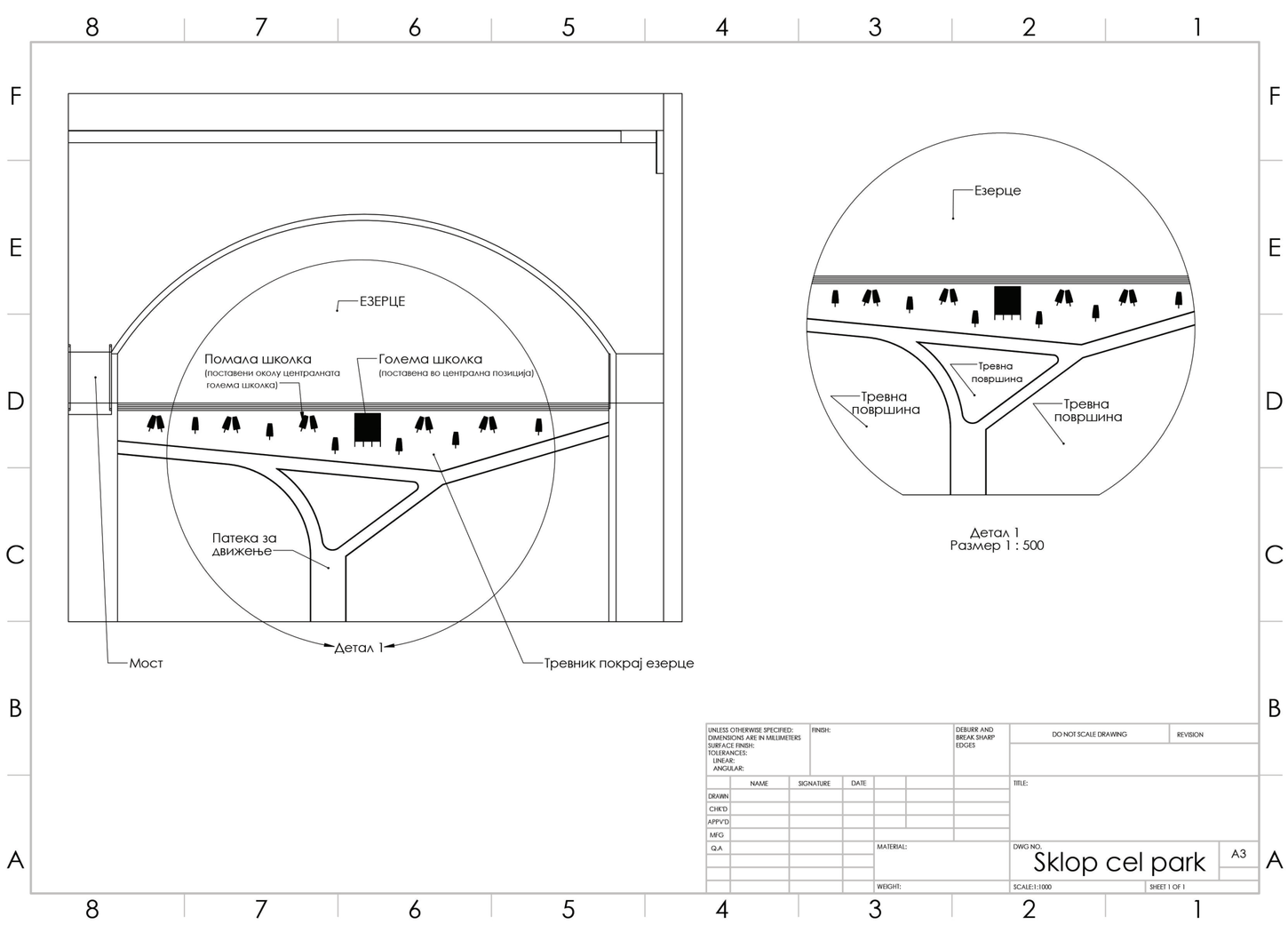

Floor plans

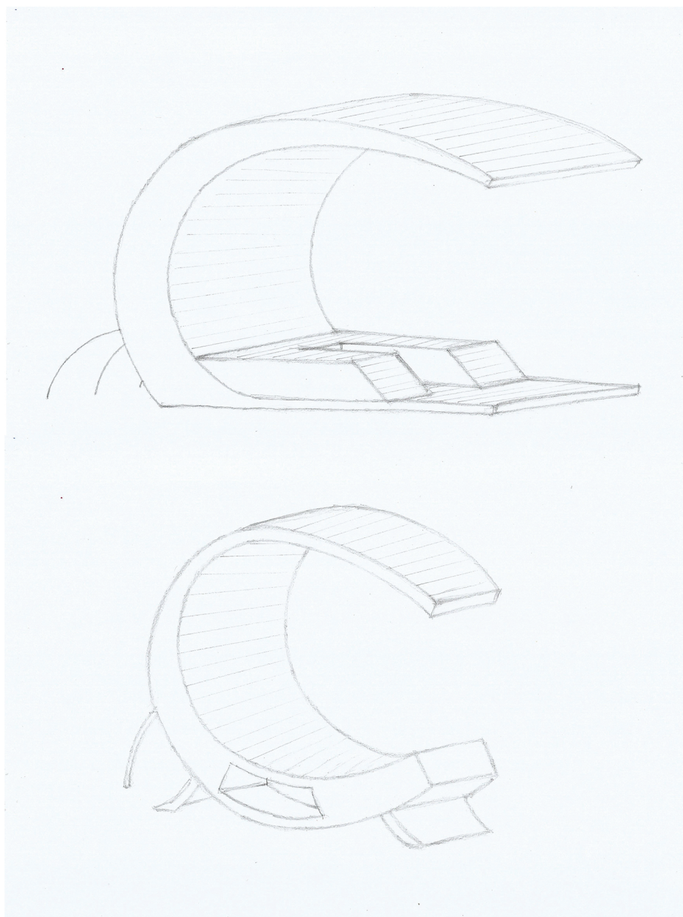

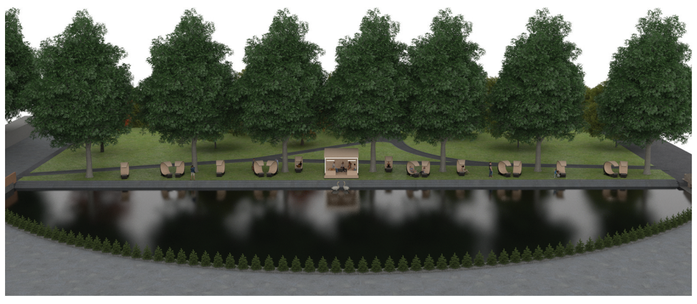

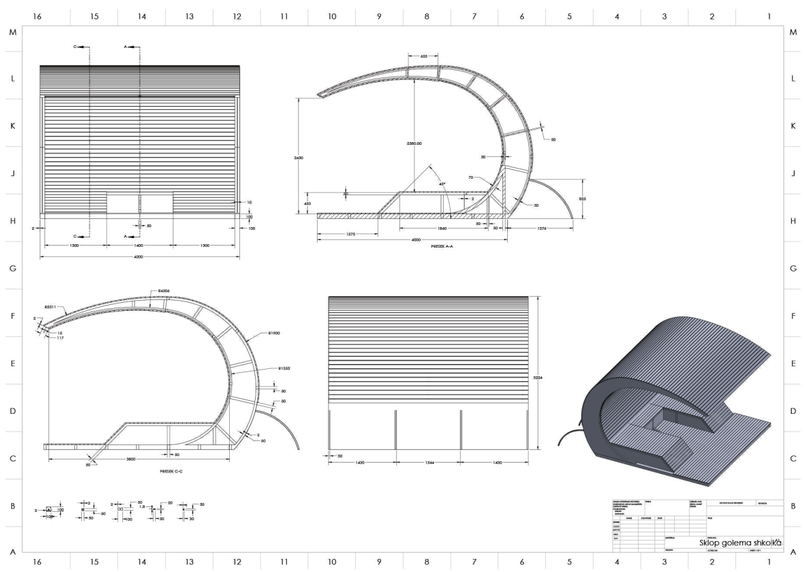

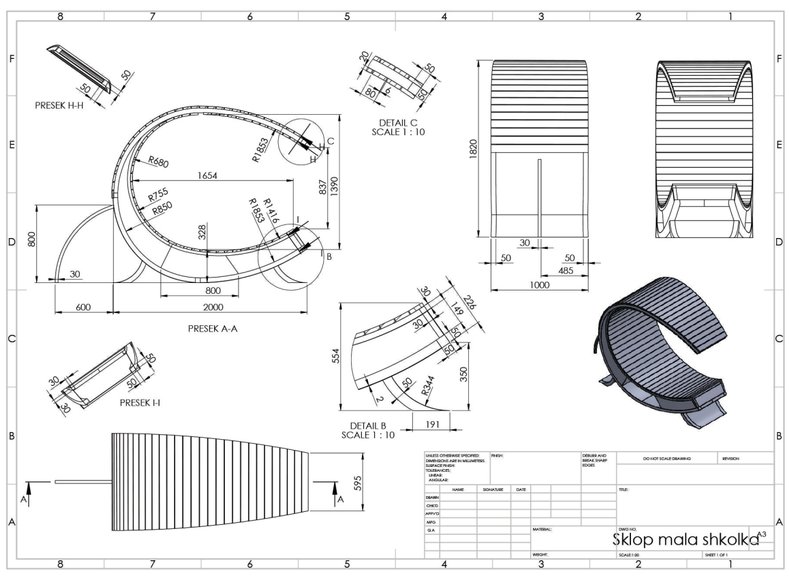

Sections and Elevations

3D views (optional)/sketches